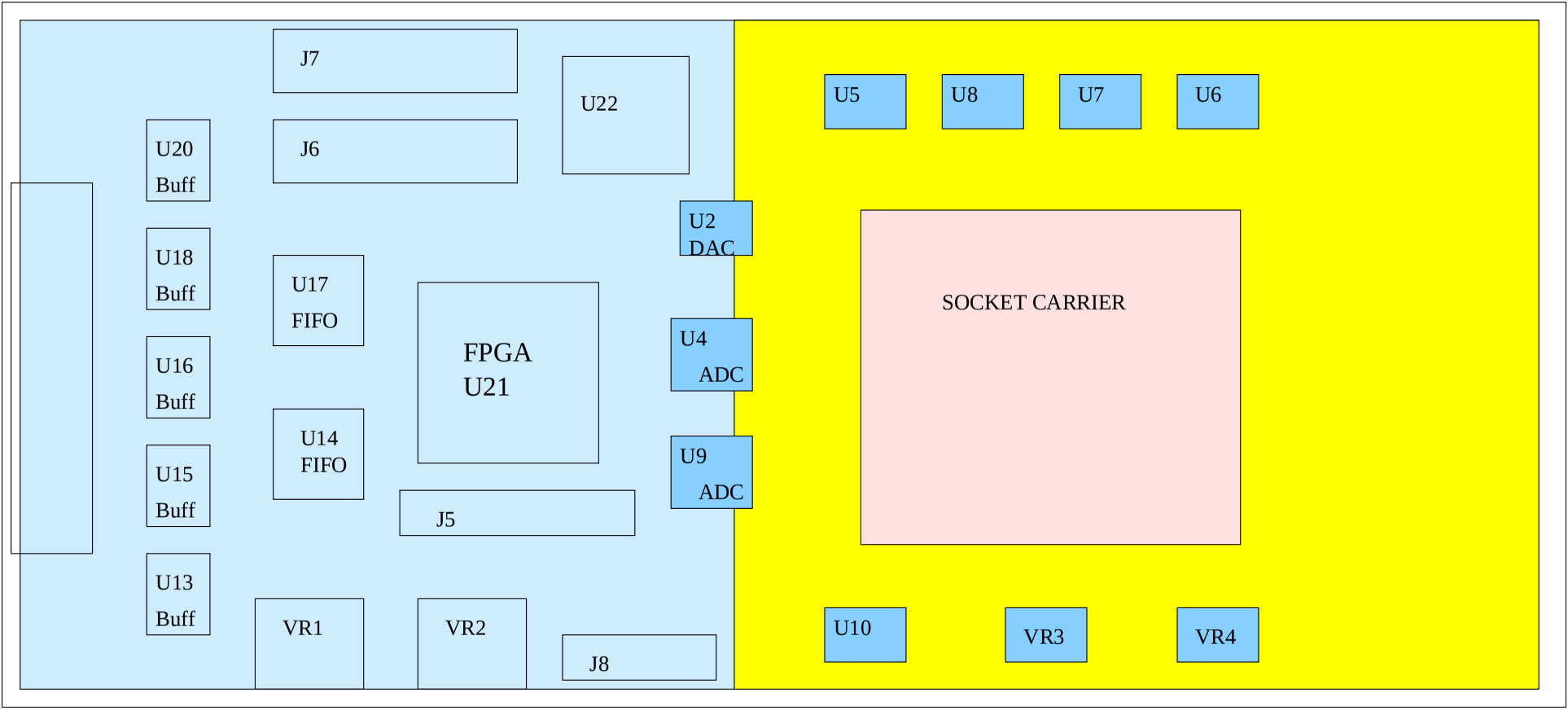
J7
U22
U5
U8
U7
U6
U20
Buff
J6
U2
DAC
U18
Buff
U17
FIFO
SOCKET CARRIER
FPGA
U21
U4
ADC
U16
Buff
U14
FIFO
U9
ADC
U15
Buff
J5
U13
Buff
VR1
VR2
J8
U10
VR3
VR4