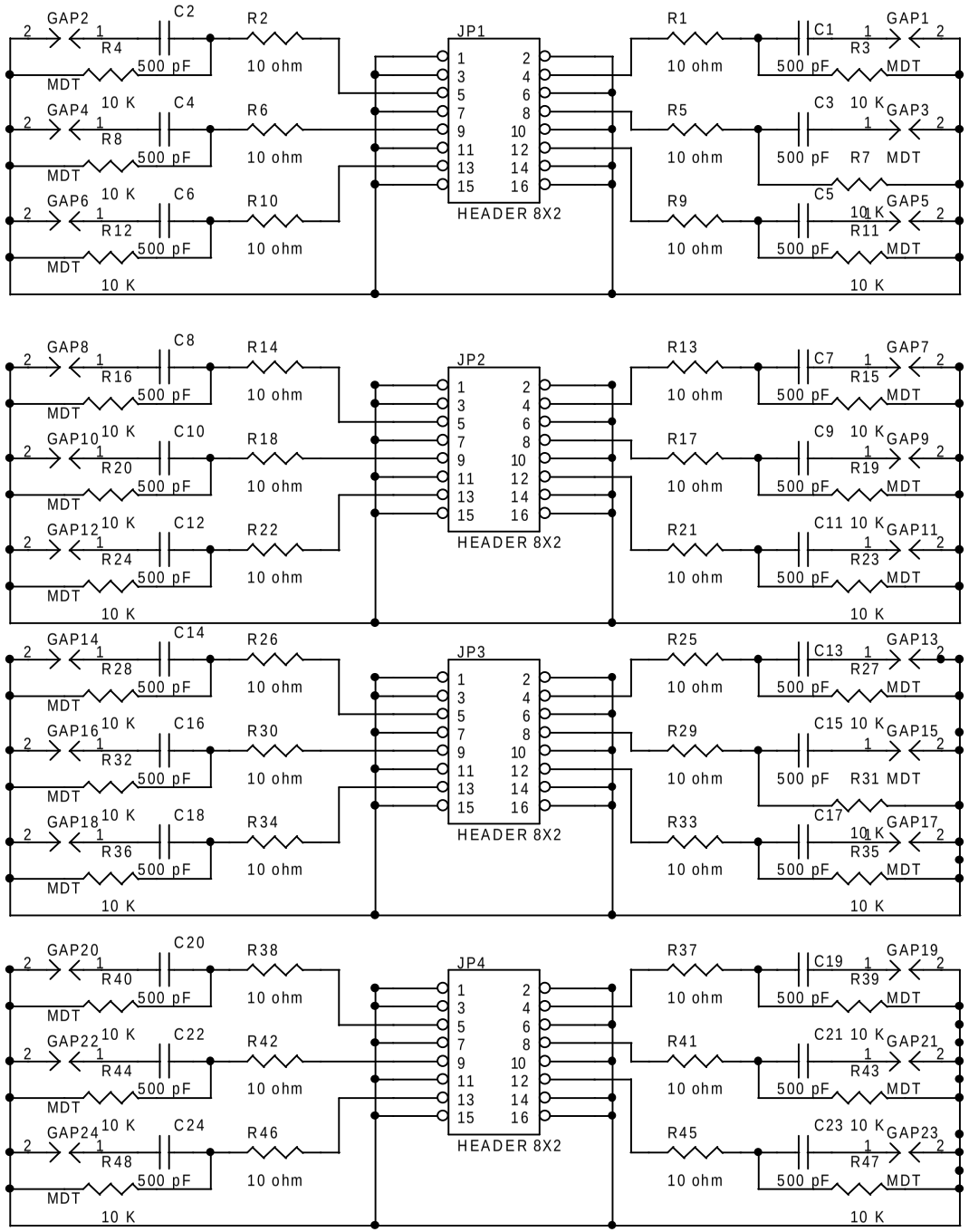

Title	Hedgehog 4x6 version up	
Size A	Document Number E. Spiriti	Rev 1
Date: Tuesday, March 30, 1999	Sheet 1 of 1	