MDT Electronics

Octal I ASD Layout

First full prototype ASD: if it works, we'll use it for production

Joint design effort: J. Oliver (Harvard) and C. Posch (B.U.)

Submitted: 10/1/00 Due back: 1/1/01
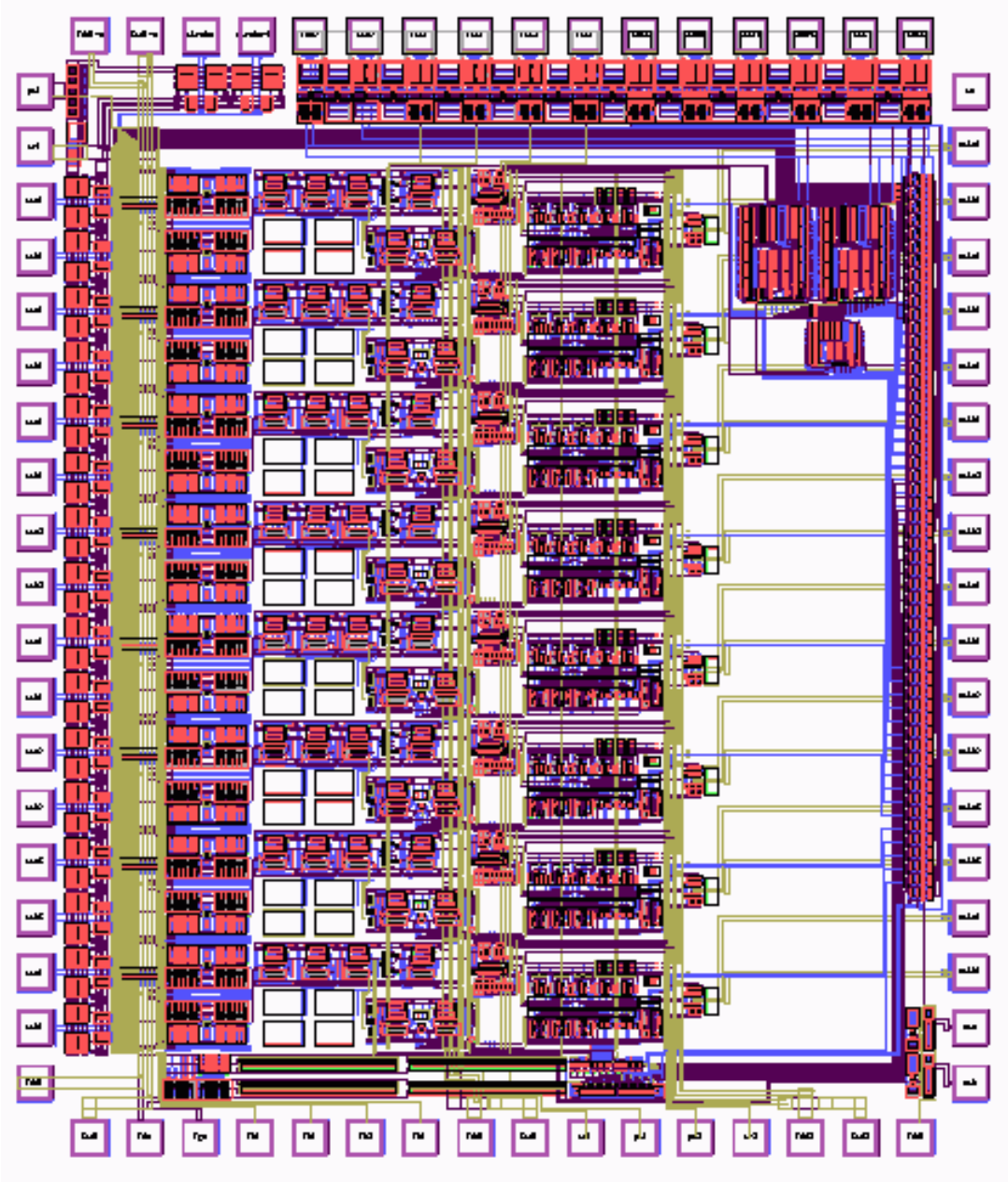
Initial. testing, Radiation qualification at CERN by C. Posch