Control ASIC

Control ASIC provides programming interface to set ASD and TDC operating parameters (thresholds, shaping times, readout modes) plus readout of temperature, supply voltage

Industry-standard JTAG protocol used for TDC+ASD interfaces.
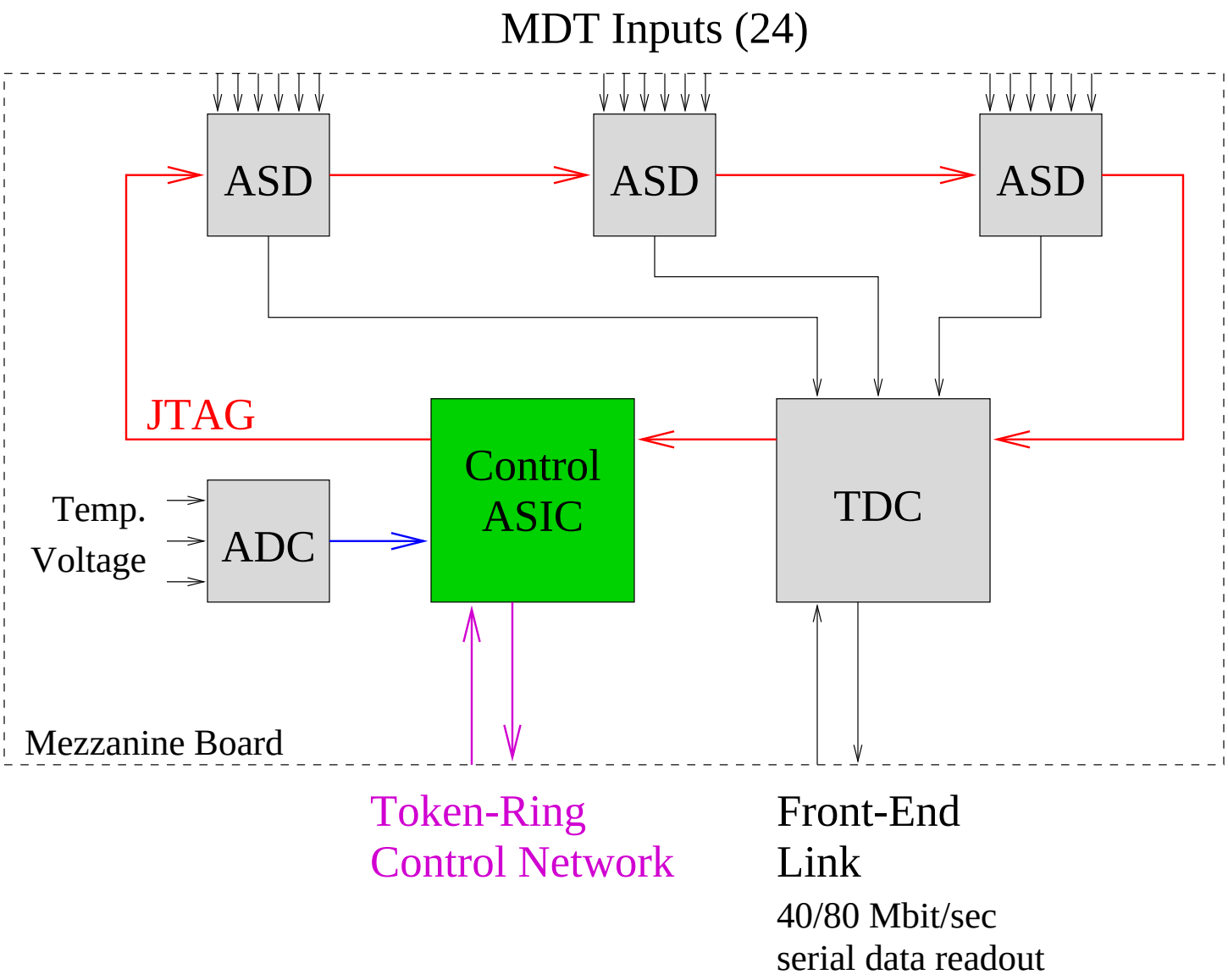
Simple token-based protocol used for inter-chamber communications.